GENERAL ARRANGEMENT DRAWING

YinkeValve FLOW CONTROL

NPS 6 (DN150) • ASME Class 300 • Wafer Type • Dual Plate Check Valve

WEBSITE SAMPLE - NOT FOR FABRICATION

Manufacturer-specific body and component envelope dimensions are subject to approved order GA.

A. SECTION VIEW (THROUGH CENTERLINE)

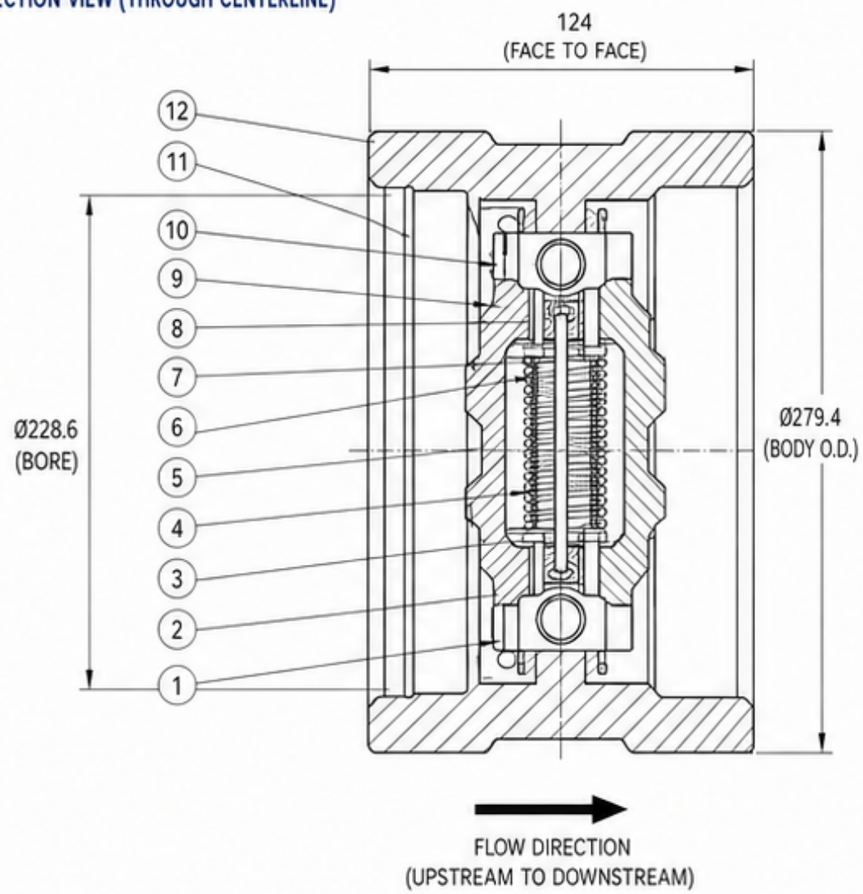

B. END VIEW

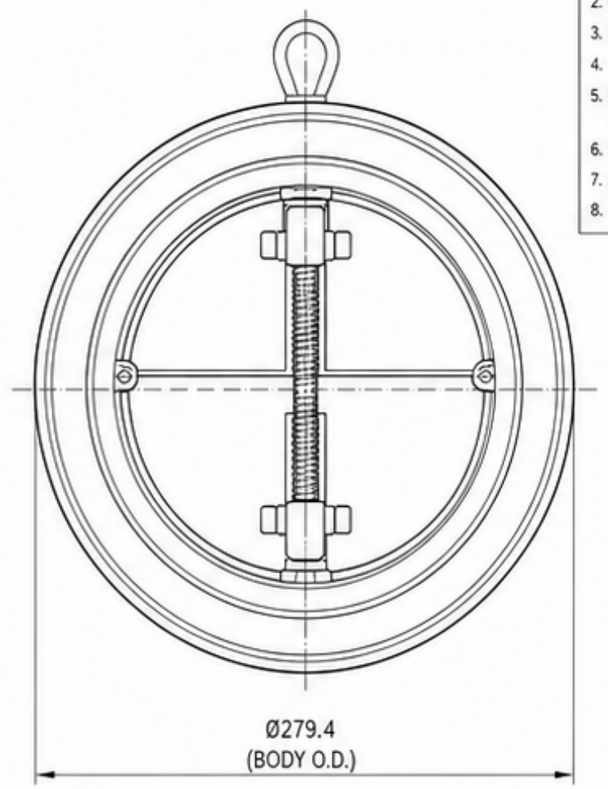

GENERAL NOTES:

1. DESIGN AND MANUFACTURE: API 594 / ASME B16.34
2. FACE TO FACE: ASME B16.10
3. END CONNECTION: ASME B16.5 (ASME CLASS 300)
4. TEST & INSPECTION: API 598
5. PRESSURE - TEMPERATURE RATING: ASME B16.34 CLASS 300
6. MARKING: MSS SP-25
7. FLOW DIRECTION: AS SHOWN
8. WEIGHT IS FOR REFERENCE ONLY

SPECIFICATIONS	
VALVE TYPE	DUAL PLATE CHECK VALVE
DESIGN STANDARD	API 594
PRESSURE RATING	ASME CLASS 300
SIZE	6" (DN150)
END CONNECTION	WAFER
BODY MATERIAL	ASTM A216 WCB
TRIM MATERIAL	ASTM A276 304
SEAT MATERIAL	METAL SEAT
OPERATION	AUTOMATIC
FLOW DIRECTION	UNIDIRECTIONAL

MATERIAL LIST

NO.	PART NAME	MATERIAL	ASTM SPEC.	QTY.
12	LIFTING EYE (OPTIONAL)	CARBON STEEL	A36	1
11	BODY RING	CARBON STEEL	A216 WCB	1
10	NAME PLATE	STAINLESS STEEL	A240 304	1
9	PLATE STOP PIN	STAINLESS STEEL	A276 304	2
8	UPPER PLATE	STAINLESS STEEL	A351 CF8	1
7	LOWER PLATE	STAINLESS STEEL	A351 CF8	1
6	SPRING	STAINLESS STEEL	A276 304	2
5	HINGE PIN	STAINLESS STEEL	A276 304	1
4	THRUST WASHER	PTFE	---	2
3	PLATE BUSHING	PTFE	---	2
2	SEAT RING	STAINLESS STEEL	A276 304	1
1	BODY	CARBON STEEL	A216 WCB	1

DIMENSIONS & WEIGHT (REFERENCE)	
NOMINAL SIZE	6" (DN150)
FACE TO FACE (A)	124 mm
BODY OUTER DIAMETER (B)	279.4 mm
BORE DIAMETER	228.6 mm
APPROX. WEIGHT	34 kg

PRESSURE - TEMPERATURE RATINGS	
TEMPERATURE (°C)	MAX. ALLOWIABLE PRESSURE (MPa)
	CLASS 300
-29 ~ 38	7.67
50	7.38
100	6.15
150	4.95
200	3.81
250	2.92
300	2.20
343	1.92

TEST PRESSURE (API 598)	
SHELL TEST (WATER)	7.67 MPa
SEAT TEST (WATER)	5.63 MPa
SEAT TEST (AIR)	0.56 MPa
BACK SEAT TEST (AIR)	0.56 MPa

NOTE:

1. DIMENSIONS AND MATERIALS SUBJECT TO CHANGE WITHOUT NOTICE.
2. THIS DRAWING IS FOR REFERENCE ONLY.
3. FOR APPROVED DRAWING, PLEASE REFER TO ORDER DOCUMENT.

DRAWING TYPE	GA DRAWING
REVISION	0
DATE	18-AUG-2026
SCALE	NTS
DRAWN BY	YKV ENG
CHECKED BY	QA DEPT

MANUFACTURER	CHINA YINKE VALVE CO., LIMITED
CUSTOMER	CONFIDENTIAL / REDACTED
PROJECT	PUBLIC ENGINEERING EVIDENCE
STATUS	WEBSITE SAMPLE - NOT FOR FABRICATION
TAG NO.	---

VALVE DESCRIPTION: WAFER CHECK VALVE (DUAL PLATE TYPE)

SIZE	PRESSURE RATING	END CONNECTION
6" (DN150)	ASME CLASS 300	WAFER

BODY MATERIAL	ASTM A216 WCB
TRIM MATERIAL	ASTM A276 304
OPERATION	AUTOMATIC
DRAWING NO.	YKV-CV-300-06-WF-00

GA DRAWING

REV. A

SHEET 1 OF 1